DIY Simple Inverter 12V to 230V

By SenulD in Circuits > Electronics 11,653 9

(cc) BY-NC-SA

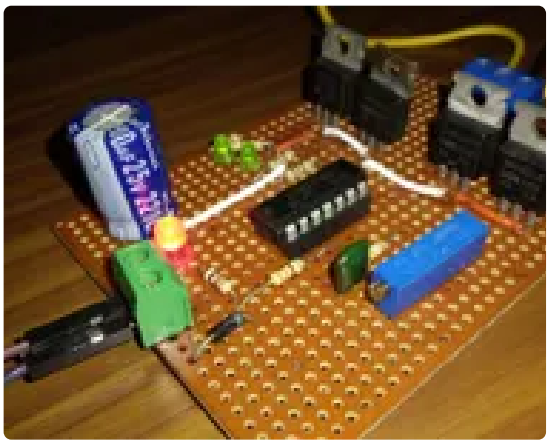

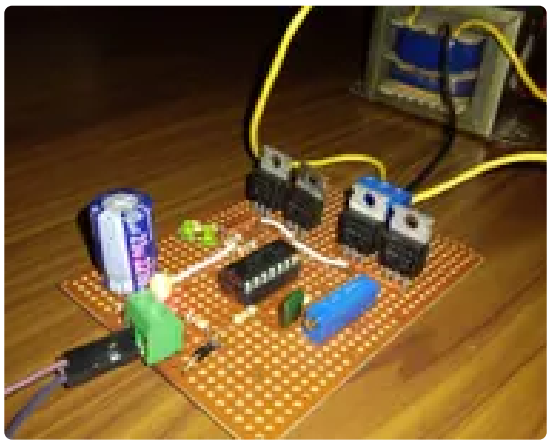

In This project I'll try to make an Simple inverter using CD4047 IC. This project is Useful for Your DIY projects.

In My country, we are currently facing to power cuts of several hours due to the Economic crisis.

There are many solutions available on the market such as Generator's, Commercial off grid Inverter systems.

Generators could not be used since our country also facing to fuel crises. And also they are very noisy.

Commercial inverters that available on the market are very expensive.

So I was making an Portable Power Station which can produce 230V and Dc voltage as a project. Instead of applying a commercial Inverter I made an Simple Inverter for

this project. From this way we can save lot of money!. So in this intructable ill explain how to make this simple inverter circuit.

Step 1: PARTS REQUIRED

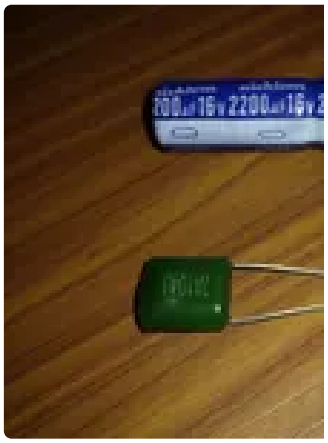

We need these components for this project.

- CD 4047 IC
- 14 pin IC base.
- 2200uf 25v Capacitor -1
- 0.01uf capacitor -1
- 390k resistor -1
- 1k potentiometer
- 1N4007 Diode -1
- 220ohm resistor -2
- 0.1uf capacitor -2
- IRF 3205 Mosfet -4

Step 2: Circuit Digram

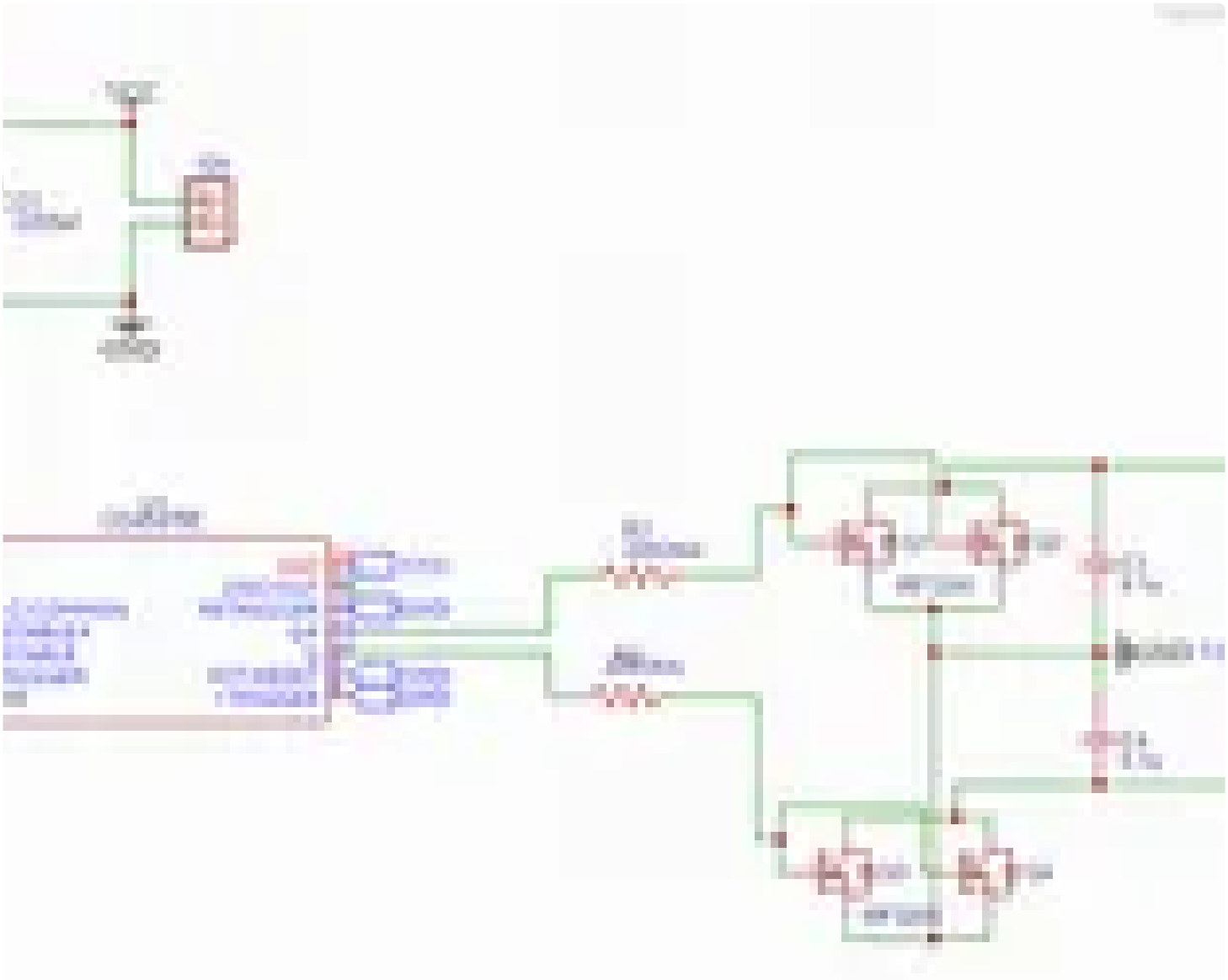

This is the Circuit Diagram.

It's a square wave inverter.

You can create a circuit on a perf board or make PCB or order a professional PCB.

Step 3: CD4047 IC

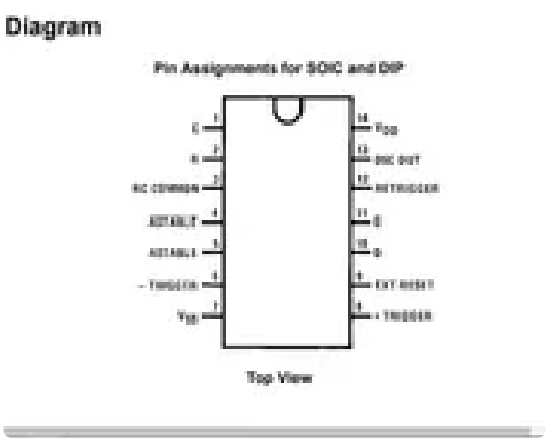

Pin#	Pin Name	Pin Description
1	C	Connected to an external capacitor
2	R	Connected to an external resistor
3	R-C Common	Common pin for establishing a connection with resistor and capacitor
4	Astable'	Must be kept low when used in astable mode
5	Astable	Must be kept high when used in astable mode
6	-Trigger	High to Low transition will be given to this pin when used in Monostable mode
7	Vss	Ground Pin
8	+Trigger	Low to high transition will be given to this pin when used in Monostable mode
9	EXT Reset	External reset triggers when a high pulse is provided to this pin, resetting the output Q to low and Q' to high
10	Q	Generates high output
11	Q'	It is an inverse output of pin 10, producing a low output
12	Retrigger	This pin is used in Monostable mode for simultaneously retriggering +trigger and -trigger pin
13	Osc Out	Generate oscillated output
14	Vdd	Voltage supply pin

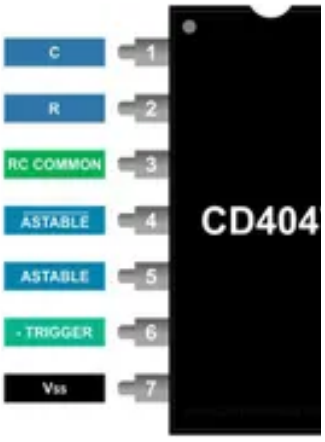

CD4047 is a CMOS Low Power monostable/astable multivibrator.

It is capable of operating in either the monostable or astable mode. It requires an external capacitor (between pins 1 and 3) and an external resistor (between pins 2 and 3) to determine the output pulse width in the monostable mode, and the output frequency in the astable mode. Astable operation is enabled by a high level on the astable input or low level on the astable input

A high level on Reset input resets the outputs Q to low, Q to high

The frequency of the outputs Q and ~Q can be calculated by the following formula:

f = 1 / 8.8 x R*C

Applications:

Frequency Multiplication

Frequency Discriminators

Timing Circuits

Time Delay Applications

Features:

Wide supply voltage range: 3.0V to 15V

Low power consumption: special CMOS oscillator configuration

Monostable (one-shot) or astable (free-running) operation

Only one external R and C required.

For more information please check the data sheet.

Step 4: About the Circuit

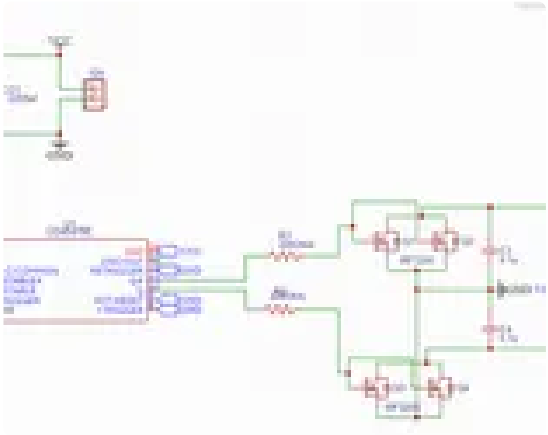

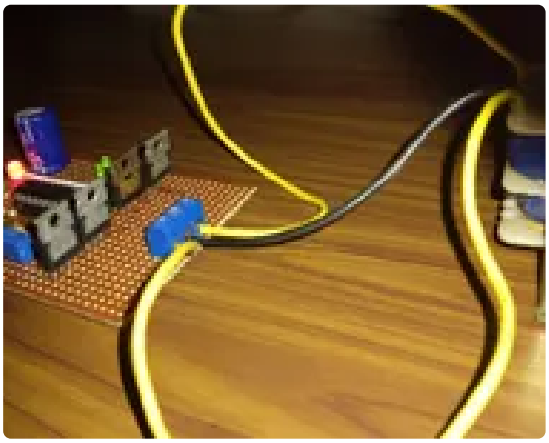

Circuit Works fine with 12V. but the IC can handle up to 18V acording to data sheet.

C1 is an Smoothing Capacitor. D1 is to provide additional secure. The IC1 will work as astable multivibrator circuit. Witch Makes it to products the square wave frequency out of both pin 10 and pin 11.

50K variable resistor determine the frequencies of the oscillations.

The power MOSFETs (IRF3205) amplifies each half of the alternating voltage produced by the oscillator to the output power transformer.

Transformer steps up the voltage from 12V DC to 230V AC. However, you can increase the output power

by adding more power MOSFETs in parallel, greater power transformer, and larger battery power bank.

<u>MOSFETs</u>

In here I have used IRF 3205 Mosfets. But you can use other mosfets like IRF540N,IRFZ 44n etc. Note that the differences are max voltage and the current amounts of the Mosfets.

Transformer

The transformer is center tap transformer (12V-0V-12V, 3A).

Step 5: Final Result

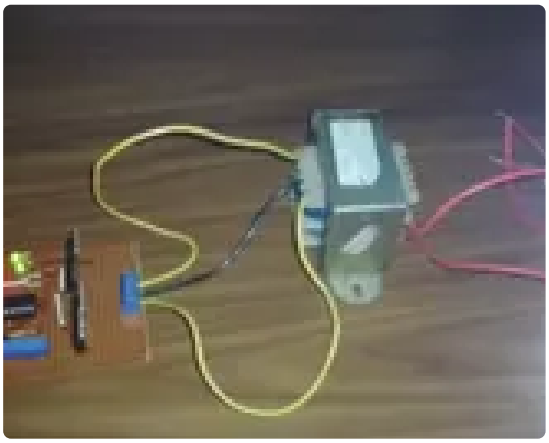

I was able to Power few Lights and my Router. And I got about 230AC as an output voltage.

Finally, Hope this was helpful.!

Thank you very much.